EXTRA DEEP TYPE						
MODEL	W x L	Ø			S	H
		DN100	DN125	DN150	5	355
JHYG-D-33K	295 x 295	Ø110	Ø125	Ø160	8	358
Max. Flow Rate lt / min		70	100	125		
Waterseal Height		70mm			10	360

EXTRA DEEP TYPE						
MODEL	W x L	Ø			S	H
		DN100	DN125	DN150	5	355
JHYG-D-44K	400 x 400	Ø110	Ø125	Ø160	8	358
Max. Flow Rate lt / min		70	100	125		
Waterseal Height		70mm			10	360

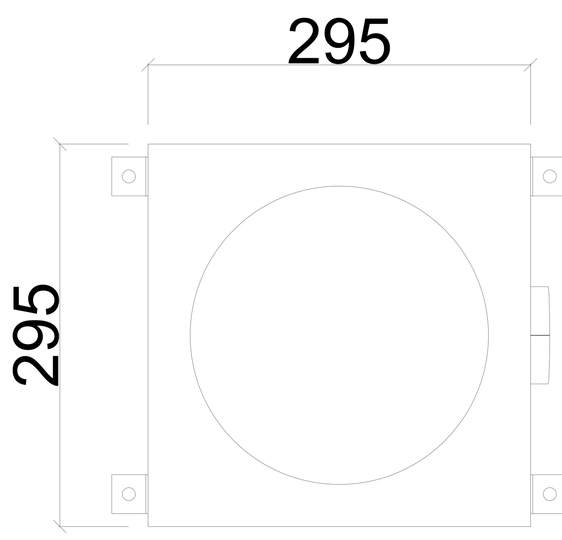

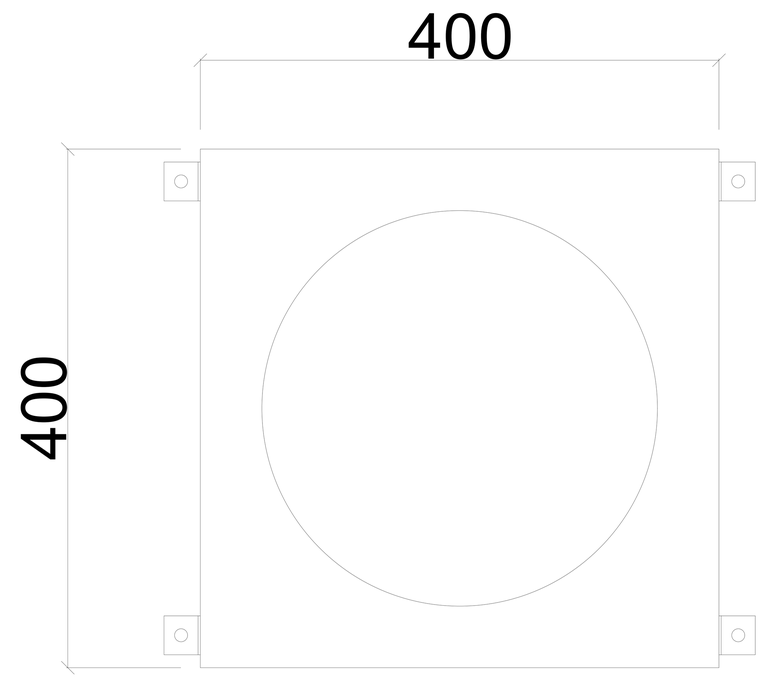

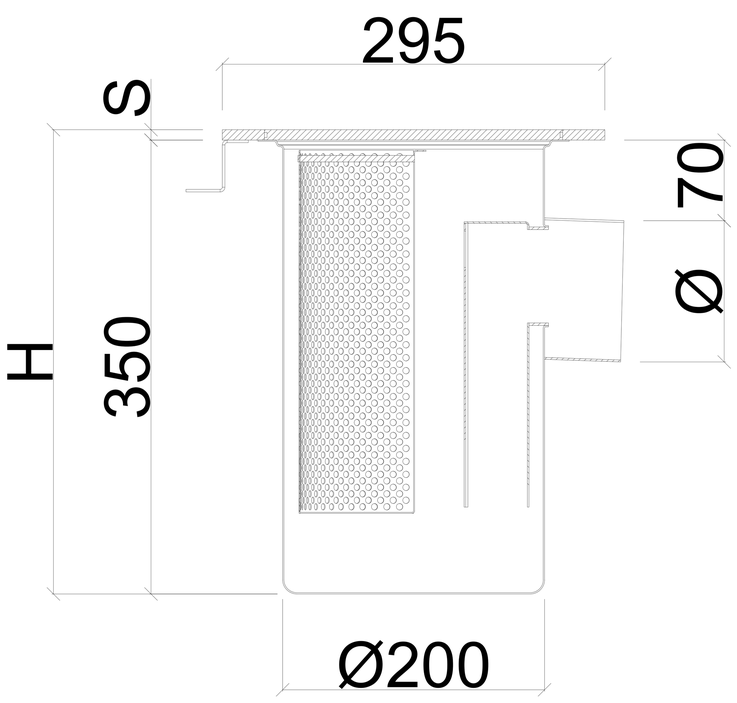

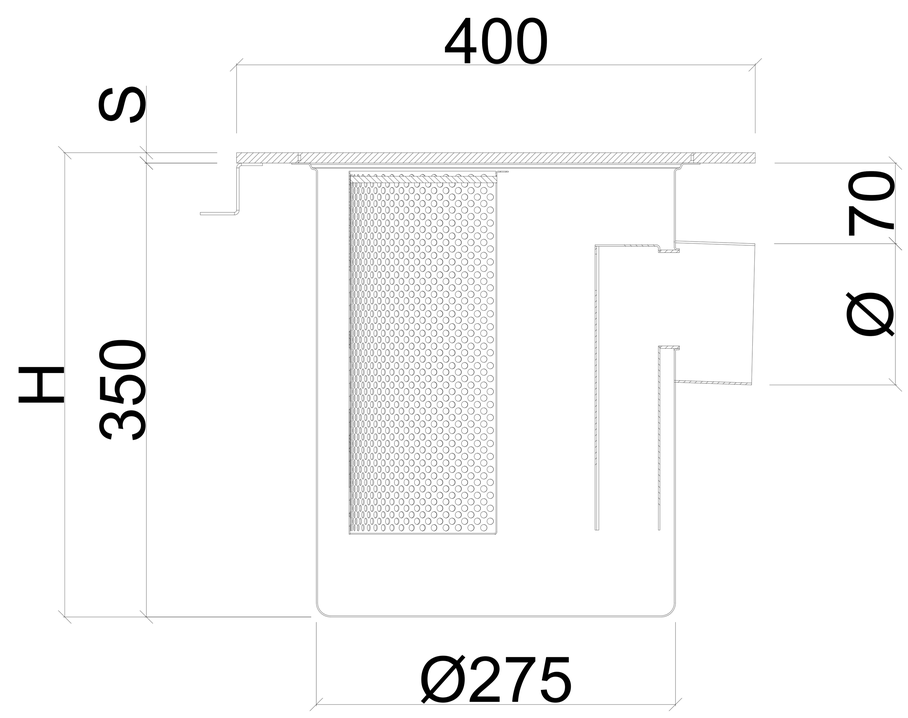

FENICROM®
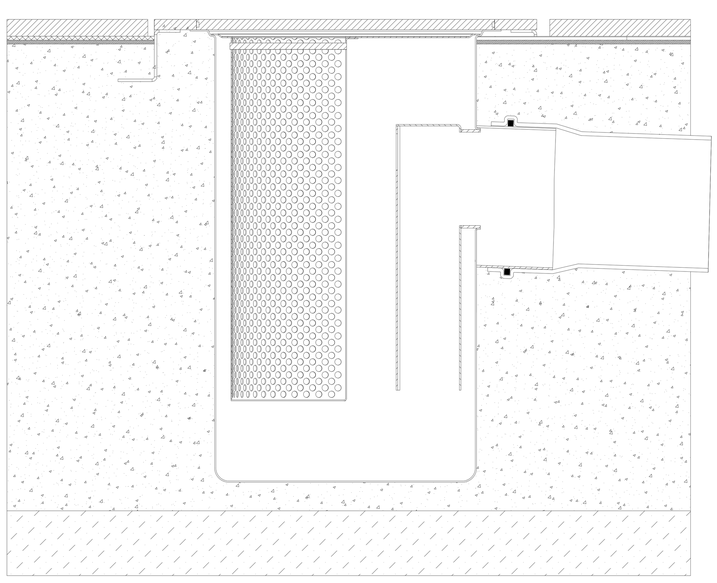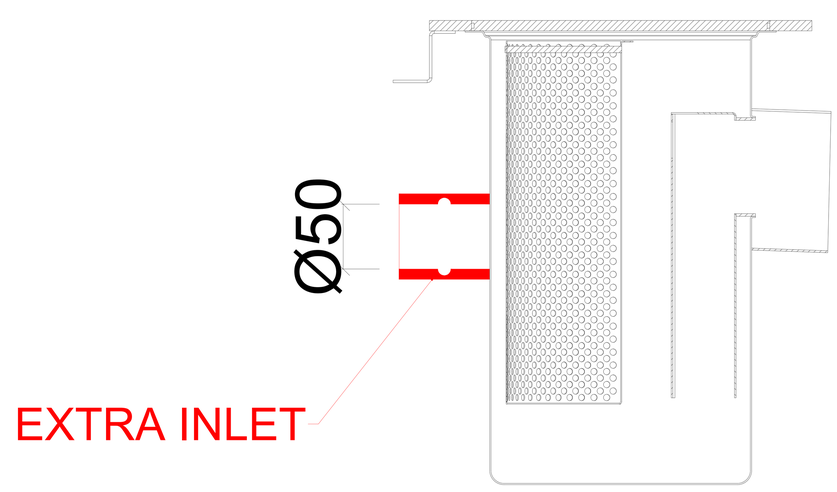
APPLICATION DRAWING